+ | TRIKKA *

Trikka Parts 2 (Addi & Bengi)

Parts for Trikka.

All images and texts CC-BY 4.0

1

–

Part info

- What: Off the shelf M6 eye bolt
- material: strong
- measures: length ~ 40 mm

Tolerance

- Size: standard tolerance
- Material: standard tolerance

Get the part

- Buy: Readily available in stores, search for: “M6 eye bolt”.
- Make: No instructions available.

KONTAKT

hello@mifactori.de

DESIGN-STUDIO VON

Open Circularity

SOCIAL

Gefällt? Gern teilen und abonnieren →

Newsletter *

Twitter

Instagram

Facebook

LinkedIn

Flickr

YouTube

TikTok

Introduced by

- Designer: Lars Zimmermann
- Open: Prior art (most likely)

Post license & disclaimer

- This post is shared under the Creative Commons Attribution 4.0 license.
- Disclaimer: This part is just a concept and not fully tested. You should not assume that it works as indicated and I am not saying that it does. I disclaim any responsibility or liability for any damage caused during the construction and use of products based in whole or in part on the concept shown here. All information is provided for your use at your own risk.

–

Update: This part was added to the Trikka parts catalog as part number 077.1

–

2

–

Part info

- Spacer
- material: strong
- measures: height ~ 16 mm, diameter ~ 30 mm – * this part doesn't necessarily be round!
- holes: one center hole ⌀ 6 mm

Tolerance

- Size: standard tolerance
- Material: standard tolerance

Get the part

- Buy: Only as local make.
- Make: No instructions available.

Introduced by

- Designer: Lars Zimmermann
- Open: Shared under TPP 1.0

Post license & disclaimer

- This post is shared under the Creative Commons Attribution 4.0 license.
- Disclaimer: This part is just a concept and not fully tested. You should not assume that it works as indicated and I am not saying that it does. I disclaim any responsibility or liability for any damage caused during the construction and use of products based in whole or in part on the concept shown here. All information is provided for your use at your own risk.

–

Update: This part was added to the Trikka parts catalog as part number 072.1

–

3 Bar 150 mm

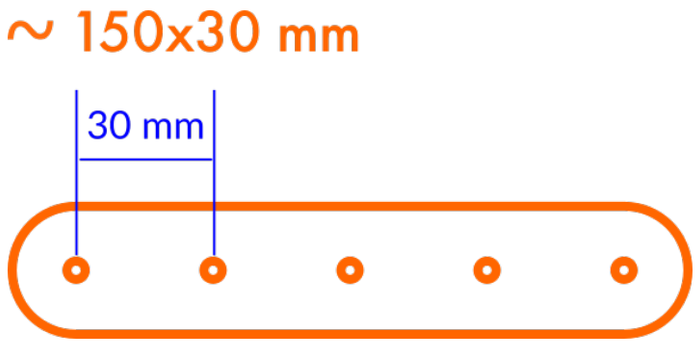

–

Part info

- Bar
- material: strong
- measures: length ~ 150 x 30 x 16 mm
- holes: Trikka grid 5 holes, ⌀ 6mm

Tolerance

- Size: standard tolerance
- Material: standard tolerance

Tolerance: The lead image shows a pretty thick version of the part. But you can use much thinner material such as this for example.

Get the part

- Buy: Only as local make.
- Make: No specific instructions available.

Introduced by

- Designer: Lars Zimmermann
- Open: Shared under TPP 1.0

Post license & disclaimer

- This post is shared under the Creative Commons Attribution 4.0 license.

- Disclaimer: This part is just a concept and not fully tested.

You should not assume that it works as indicated and I am not saying that it does. I disclaim any responsibility or liability for any damage caused during the construction and use of products based in whole or in part on the concept shown here. All information is provided for your use at your own risk.

–

Update: This part was added to the Trikka parts catalog as part number 073.1

–

4 Bar 420 mm

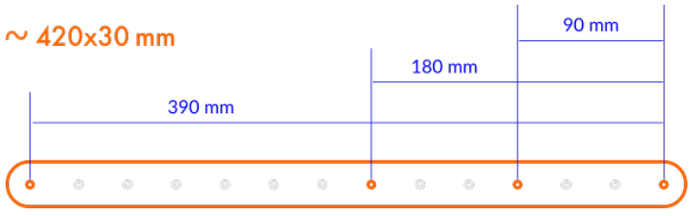

–

Part info

- Bar
- material: strong
- measures: ~ 420 x 30 x 16 mm
- holes: Trikka grid, 4 holes ⌀ 6mm, for hole distribution see drawing.

Tolerance

- Size: standard tolerance
- Material: standard tolerance

Tolerance: The lead image shows a pretty thick version of the part. But you can use much thinner material such as this for example.

Get the part

- Buy: Only as local make.
- Make: No specific instructions available.

Introduced by

- Designer: Lars Zimmermann
- Open: Shared under TPP 1.0

Post license & disclaimer

- This post is shared under the Creative Commons Attribution 4.0 license.
- Disclaimer: This part is just a concept and not fully tested. You should not assume that it works as indicated and I am not saying that it does. I disclaim any responsibility or liability for any damage caused during the construction and use of products based in whole or in part on the concept shown here. All information is provided for your use at your own risk.

–

Update: This part was added to the Trikka parts catalog as part number 075.1

–

5 Bar 600 mm

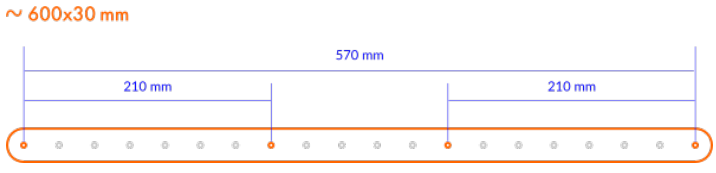

–

Part info

- Bar
- material: strong
- measures: ~ 600 x 30 x 16 mm
- holes: Trikka grid, 4 holes ⌀ 6mm, for hole distribution see drawing

Tolerance

- Size: standard tolerance
- Material: standard tolerance

Tolerance: The lead image shows a pretty thick version of the part. But you can use much thinner material such as this for example.

Get the part

- Buy: Only as local make.
- Make: No specific instructions available.

Introduced by

- Designer: Lars Zimmermann
- Open: Shared under TPP 1.0

Post license & disclaimer

- This post is shared under the Creative Commons Attribution 4.0 license.

- Disclaimer: This part is just a concept and not fully tested. You should not assume that it works as indicated and I am not saying that it does. I disclaim any responsibility or liability for any damage caused during the construction and use of products based in whole or in part on the concept shown here. All information is provided for your use at your

own risk.

–

Update: This part was added to the Trikka parts catalog as part number 076.1

–

6 Beam

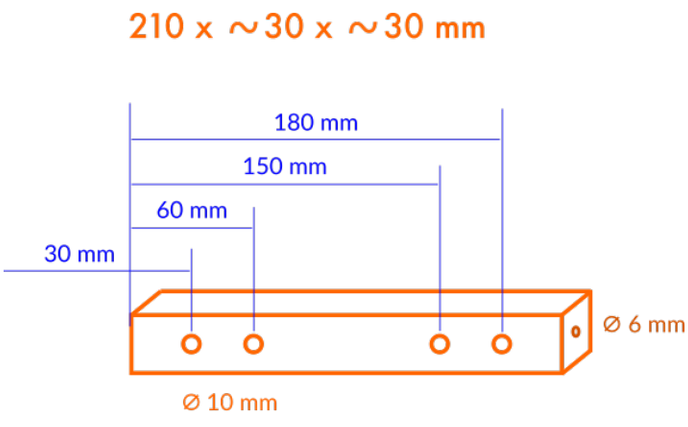

–

Part info

- Beam
- material: strong
- measures: 210 x ~ 30 x ~ 30 mm
- holes: Trikka grid, 4 face-holes ⌀ 10mm, 2 side holes 6 mm. The side holes are drilled through the first face-hole so at least 50mm deep. For location of holes see also drawing.

Tolerance

- Size: The length of this part is fixed to 210 mm and the distance of the holes to side also. The thickness of the part is flexible within the standard tolerance
- Material: standard tolerance

Get the part

- Only as local make.
- Make: No specific instructions available.

Introduced by

- Designer: Lars Zimmermann
-
- Open: Shared under TPP 1.0.

Post license & disclaimer

- This post is shared under the Creative Commons Attribution 4.0 license.
- Disclaimer: This part is just a concept and not fully tested. You should not assume that it works as indicated and I am not saying that it does. I disclaim any responsibility or liability for any damage caused during the construction and use of products based in whole or in part on the concept shown here. All information is provided for your use at your own risk.

–

Update: This part was added to the Trikka parts catalog as part number 078.1

–

7

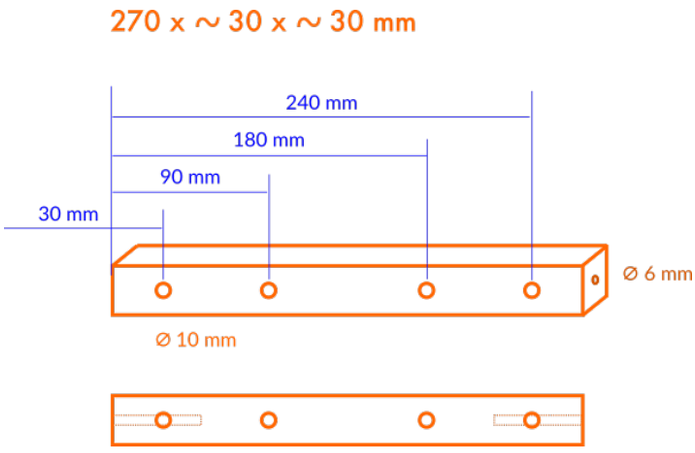

–

Part info

- Beam
- material: strong
- measures: 270 x ~ 30 x ~ 30 mm
- holes: Trikka grid, 4 face-holes ⌀ 10mm, 2 side holes 6 mm. The side holes are drilled through the first face-hole so at least 50mm deep. For the exact location of the holes see also the drawing.

Tolerance

- Size: The length of this part is fixed to 270 mm and the distance of the holes to the side also. The thickness of the part is flexible within the standard tolerance
- Material: standard tolerance

Get the part

- Only as local make.
- Make: No specific instructions available.

Introduced by

- Designer: Lars Zimmermann
- Open: Shared under TPP 1.0.

Post license & disclaimer

- This post is shared under the Creative Commons Attribution 4.0 license.
- Disclaimer: This part is just a concept and not fully tested. You should not assume that it works as indicated and I am not saying that it does. I disclaim any responsibility or liability for any damage caused during the construction and use of products based in whole or in part on the concept shown here. All information is provided for your use at your own risk.

–

Update: This part was added to the Trikka parts catalog as part number 079.1

–

8

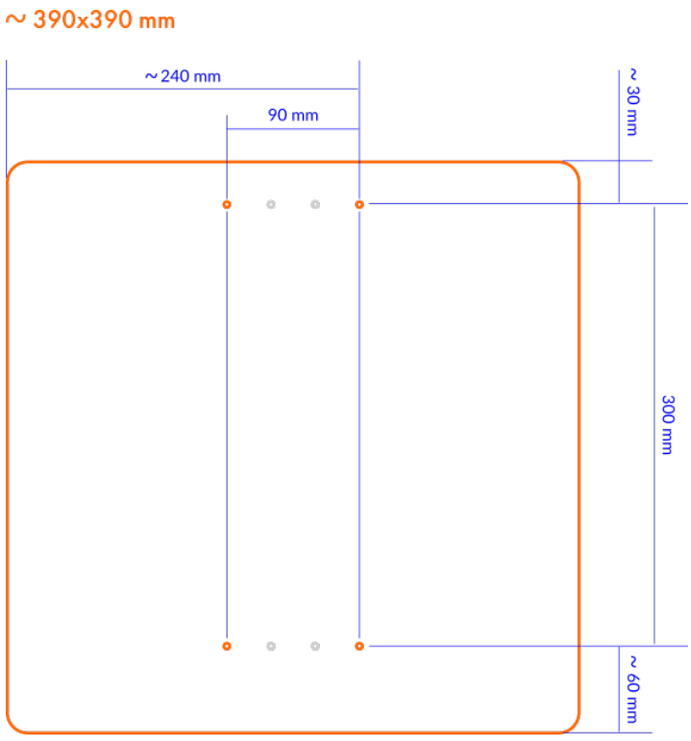

–

Part info

- A plate
- material: strong
- measures: ~ 390 x 390 x 16 mm
- holes: 4 holes ⌀ 6mm, Trikka grid, see drawing for exact locations

Tolerance

- Size: standard tolerance. You can for example use this for a chair and have a butt pattern milled in.
- Material: standard tolerance

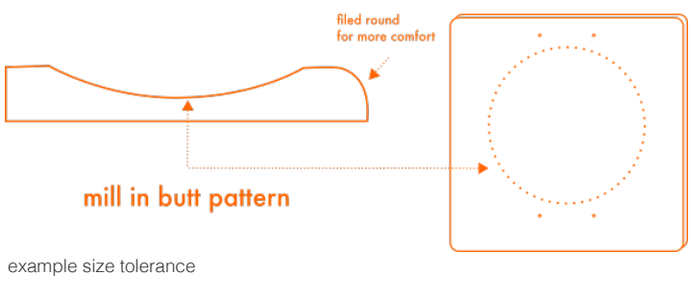

example size tolerance

Get the part

- Only as local make.
- Make: No specific instructions available.

Introduced by

- Designer: Lars Zimmermann

- Open: Shared under TPP 1.0.

Post license & disclaimer

- This post is shared under the Creative Commons Attribution 4.0 license.
- Disclaimer: This part is just a concept and not fully tested. You should not assume that it works as indicated and I am not saying that it does. I disclaim any responsibility or liability for any damage caused during the construction and use of products based in whole or in part on the concept shown here. All information is provided for your use at your own risk.

–

Update: This part was added to the Trikka parts catalog as part number 080.1

–

9

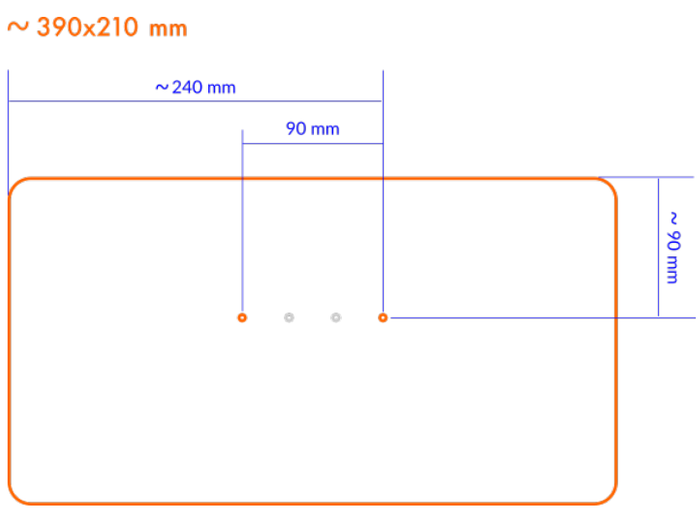

–

Part info

- A plate
- material: strong
- measures: ~390 x 210 x 16 mm
- holes: 2 holes ⌀ 6mm in Trikka grid, see drawing for exact locations

Tolerance

- Size: standard tolerance – you can for example mill in a curve when this part is first used as a backrest.
- Material: standard tolerance

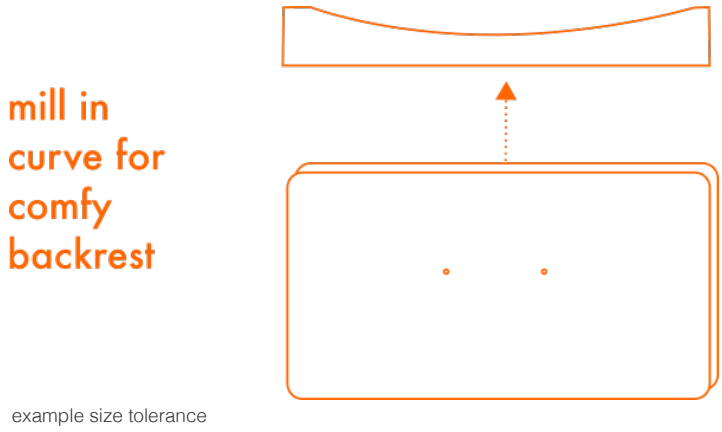

example size tolerance

Get the part

- Buy: Readily available in stores, search for: "–" | Only as local make.
- Make: No instructions available.

Introduced by

- Designer: Lars Zimmermann
- Original post, original post backup.pdf
- Open: Shared under TPP 1.0.
- Open: This part was bought off the shelf. It is probably prior art. For high volume commercial use though check the legal status though (and let us know please)
- Open: Prior art (most likely)

Post license & disclaimer

- This post is shared under the Creative Commons Attribution 4.0 license.
- Disclaimer: This part is just a concept and not fully tested. You should not assume that it works as indicated and I am not saying that it does. I disclaim any responsibility or liability for any damage caused during the construction and use of products based in whole or in part on the concept shown here. All information is provided for your use at your own risk.

–

Update: This part was added to the Trikka parts catalog as part number 081.1.

–

10

–

Part info

- Bar
- material: strong
- measures: ~ 690 x 30 x 16 mm
- holes: 4 holes ⌀ 6mm in Trikka grid, see drawing for exact locations

Tolerance

- Size: standard tolerance
- Material: standard tolerance

Tolerance: The lead image shows a pretty thick version of the part. But you can use much thinner material such as this for example.

Get the part

- Only as local make.
- Make: No specific instructions available.

Introduced by

- Designer: Lars Zimmermann
- Open: Shared under TPP 1.0

Post license & disclaimer

- This post is shared under the Creative Commons Attribution 4.0 license.
- Disclaimer: This part is just a concept and not fully tested. You should not assume that it works as indicated and I am not saying that it does. I disclaim any responsibility or liability for any damage caused during the construction and use of products based in whole or in part on the concept shown here. All information is provided for your use at your own risk.

–

Update: This part was added to the Trikka parts catalog as part number 083.1

–

11

–

Part info

- What: Off the shelf M6 round nut/socket
- material: strong
- measures: ~ 20 mm long

Tolerance

- Size: standard tolerance
- Material: standard tolerance

Get the part

- Buy: Readily available in stores, search for: “M6 round nut”
- Make: No instructions available.

Introduced by

- Designer: Lars Zimmermann
- Open: Prior art (most likely)

Post license & disclaimer

- This post is shared under the Creative Commons Attribution 4.0 license.
- Disclaimer: This part is just a concept and not fully tested. You should not assume that it works as indicated and I am not saying that it does. I disclaim any responsibility or liability for any damage caused during the construction and use of products based in whole or in part on the concept shown here. All information is provided for your use at your own risk.

–

Update: This part was added to the Trikka parts catalog as part number 074.1

–

12

–

Part info

- What: Off the shelf M6 cross nut
- material: strong
- measures: ~ 20 mm

Tolerance

- Size: standard tolerance
- Material: standard tolerance

Get the part

- Buy: Readily available in stores, search for: “M6 cross nut”
- Make: No instructions available.

Introduced by

- Designer: Lars Zimmermann
- Open: Prior art (most likely)

Post license & disclaimer

- This post is shared under the Creative Commons Attribution 4.0 license.
- Disclaimer: This part is just a concept and not fully tested. You should not assume that it works as indicated and I am not saying that it does. I disclaim any responsibility or liability for any damage caused during the construction and use of products based in whole or in part on the concept shown here. All information is provided for your use at your own risk.

–

Update: This part was added to the Trikka parts catalog as part number 029.1

–

13 M6 nut

–

Part info

- What: Off the shelf M6 nut
- material: strong

Tolerance

- Size: standard tolerance
- Material: standard tolerance

Get the part

- Buy: Readily available in stores, search for: “M6 nut”
- Make: No instructions available.

Introduced by

- Designer: Lars Zimmermann
- Open: Prior art (most likely)

Post license & disclaimer

- This post is shared under the Creative Commons Attribution 4.0 license.
- Disclaimer: This part is just a concept and not fully tested. You should not assume that it works as indicated and I am not saying that it does. I disclaim any responsibility or liability for any damage caused during the construction and use of products based in whole or in part on the concept shown here. All information is provided for your use at your own risk.

–

Update: This part was added to the Trikka parts catalog as part number 089.1

–

14 M6 bolt 90mm

–

Part info

- What: Off the shelf M6 bolt
- material: strong
- measures: ~ 90 mm long

Tolerance

- Size: standard tolerance
- Material: standard tolerance

Get the part

- Buy: Readily available in stores, search for: “M6 bolt”
- Make: No instructions available.

Introduced by

- Designer: Lars Zimmermann
- Open: Prior art (most likely)

Post license & disclaimer

- This post is shared under the Creative Commons Attribution 4.0 license.
- Disclaimer: This part is just a concept and not fully tested. You should not assume that it works as indicated and I am not saying that it does. I disclaim any responsibility or liability for any damage caused during the construction and use of products based in whole or in part on the concept shown here. All information is provided for your use at your own risk.

–

Update: This part was added to the Trikka parts catalog as part number 082.3

–

15 M6 bolt 110mm

–

Part info

- What: Off the shelf M6 bolt
- material: strong
- measures: ~ 110 mm long

Tolerance

- Size: standard tolerance
- Material: standard tolerance

Get the part

- Buy: Readily available in stores, search for: “M6 bolt 110”
- Make: No instructions available.

Introduced by

- Designer: Lars Zimmermann
- Open: Prior art (most likely)

Post license & disclaimer

- This post is shared under the Creative Commons Attribution 4.0 license.
- Disclaimer: This part is just a concept and not fully tested. You should not assume that it works as indicated and I am not saying that it does. I disclaim any responsibility or liability for any damage caused during the construction and use of products based in whole or in part on the concept shown here. All information is provided for your use at your own risk.

–

Update: This part was added to the Trikka parts catalog as part number 082.4

–

16 M6 bolt 130

–

Part info

- What: Off the shelf M6 bolt
- material: strong
- measures: ~ 130 mm long

Tolerance

- Size: standard tolerance
- Material: standard tolerance

Get the part

- Buy: Readily available in stores, search for: “M6 bolt 130mm”
- Make: No instructions available.

Introduced by

- Designer: Lars Zimmermann
- Open: Prior art (most likely)

Post license & disclaimer

- This post is shared under the Creative Commons Attribution 4.0 license.
- Disclaimer: This part is just a concept and not fully tested. You should not assume that it works as indicated and I am not saying that it does. I disclaim any responsibility or liability for any damage caused during the construction and use of products based in whole or in part on the concept shown here. All information is provided for your use at your own risk.

–

Update: This part was added to the Trikka parts catalog as part number 082.5

–

17 M6 bolt 50mm

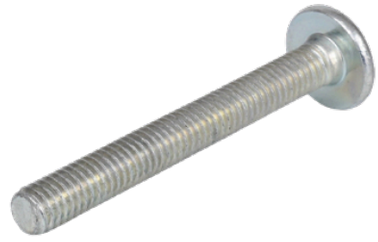

–

Part info

- What: Off the shelf M6 bolt
- material: strong
- measures: ~ 50 mm long

Tolerance

- Size: standard tolerance
- Material: standard tolerance

Get the part

- Buy: Readily available in stores, search for: “M6 bolt 50mm”
- Make: No instructions available.

Introduced by

- Designer: Lars Zimmermann
- Open: Prior art (most likely)

Post license & disclaimer

- This post is shared under the Creative Commons Attribution 4.0 license.
- Disclaimer: This part is just a concept and not fully tested. You should not assume that it works as indicated and I am not saying that it does. I disclaim any responsibility or liability for any damage caused during the construction and use of products based in whole or in part on the concept shown here. All information is provided for your use at your own risk.

–

Update: This part was added to the Trikka parts catalog as part number 082.1

–

18 M4 rivet nut

Part info

- What: Off the shelf M4 rivet nut
- material: strong (usually aluminium)
- measures: outer diameter ~6mm, height ~10mm

Tolerance

- Size: standard tolerance
- Material: standard tolerance

Get the part

- Buy: Readily available in stores. Search for “M4 rivet nut”
- Make: No instructions available

Introduced by

- Designer: Lars Zimmermann
- Open: Prior art (most likely)

Post license & disclaimer

- This post is shared under the Creative Commons Attribution 4.0 license.

- Disclaimer: This part is just a concept and not fully tested. You should not assume that it works as indicated and I am not saying that it does. I disclaim any responsibility or liability for any damage caused during the construction and use of products based in whole or in part on the concept shown here. All information is provided for your use at your own risk.

–

Update: This part was added to the Trikka parts catalog as part number 091.1

–

19 M4 countersunk bolt 20mm

Part info

- What: Off the shelf M4 bolt (countersunk)
- material: strong
- measures: ~20mm long

Tolerance

- Size: standard tolerance
- Material: standard tolerance

Get the part

- Buy: Readily available in stores. Search for “M4 countersunk bolt 20mm”
- Make: No instructions available

Introduced by

- Designer: Lars Zimmermann
- Open: Prior art (most likely)

Post license & disclaimer

- This post is shared under the Creative Commons Attribution 4.0 license.
- Disclaimer: This part is just a concept and not fully tested. You should not assume that it works as indicated and I am not saying that it does. I disclaim any responsibility or liability for any damage caused during the construction and use of products based in whole or in part on the concept shown here. All information is provided for your use at your own risk.

–

Update: This part was added to the Trikka parts catalog as part number 086.1

–

← VORHER
Lamp Moe

NÄCHSTES →
Trikka Parts 3

LIZENZ (FALLS NICHT ANDERS VERMERKT): CC-BY 4.0 (URHEBERRECHT) + +MFPP PUBLIC PROMISE (DESIGNRECHTE)

THIS PAGE IS .NOT. AN ART PROJECT